D1S LUNEX Standard 4300K

Product Description

Xenon Standard 4300K has a slightly off-white light similar to that of sunlight, giving maximum transparency on the road. Thanks to the latest technology, Xenon bulbs are the most durable and least energy-consumin

High Intensity Discharge HID Xenon bulbs produce up to two times more luminous power than standard halogen bulbs, thereby improving driving safety in all conditions. HID headlights produce a whiter, brighter light than normal headlight bulbs, provide maximum visibility and safety. They last far longer than standard bulbs. The light they provide is more intense and offers a consistent, clearly defined beam.

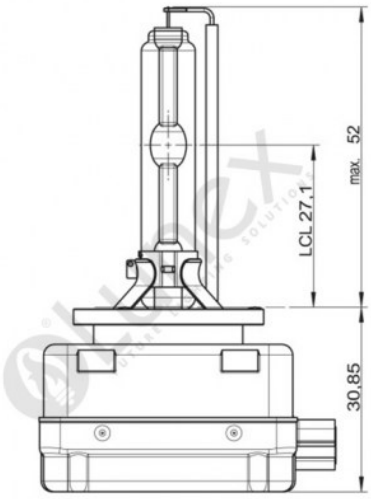

Technical data

Power input	35 W
Power input tolerance	±3 %
Nominal voltage	85 V
Nominal wattage	35 W
Test voltage	13.5 V
Luminous flux	3200 lm
Luminous flux tolerance	±15 %
Color temperature	4300 K
Product weight	60 g
Base	PK32d-2
Lifespan B3	1450 h
Lifespan Tc	2450 h

Copyright 2017 Lunex. All Rights Reserved.
contact: office@lunextechnology.co.uk