H7 BLUE WHITE 3700K

Product Description

Beautiful white light giving up to 75% more luminosity than standard halogens. Lunex halogen boosts your visibility with up to 35m more distance. This allows you easily notice obstacles and other potential dangers on the road than most headlamps. Ideal replacement for Halogen Cool Blue. White-blue lights which enhance and improve the vehicle's vision as it reflects back with light blueness around the car.

Lunex halogen bulbs produce up to two times more luminous power than standard bulbs, thereby improving driving safety in all conditions, provide maximum visibility. They last far longer than standard bulbs. The light they provide is more intense and offers a consistent, clearly defined beam.

Unique patented packaging to ensure reliability of the product transport as per picture above.
UV filter – extended the lifetime of bulbs - increase the life span.
HQ UV Quartz Qlass is a very strong glass, resistant to extreme temperatures and vibrations, eliminating the risk of explosion. UV quartz glass emits a stronger, cleaner light.
Simple to use, no need to change the lamp line and easy installation(plug in & replace stock light bulbs).
Authenticity confirmation - QR code
International warranty - 1 year
High Quality Premium Replacement Bulbs

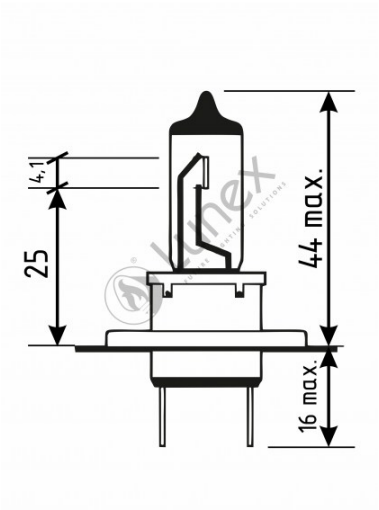

Technical data

Power input	55 W
Nominal voltage	12.0 V
Nominal wattage	55 W
Base	PX26d
Color temperature	3700K
Luminous flux	1500 lm

Copyright 2017 Lunex. All Rights Reserved.
contact: office@lunextechnology.co.uk