D3S LUNEX Premium 8000K

Product Description

LUNEX Luxury Premium 8000K Xenon headlights feature an advanced technology which produces stylish blue tint. This is a bulb for connoisseurs who looking for cool blue hue which most people recognize as the expensive, elegant look. White-blue lights which enhance and improve the vehicle's vision as it reflects back with light blueness around the car.

High Intensity Discharge HID Xenon bulbs produce up to two times more luminous power than standard halogen bulbs, thereby improving driving safety in all conditions. HID headlights produce a whiter, brighter light than normal headlight bulbs, provide maximum visibility and safety. They last far longer than standard bulbs. The light they provide is more intense and offers a consistent, clearly defined beam.

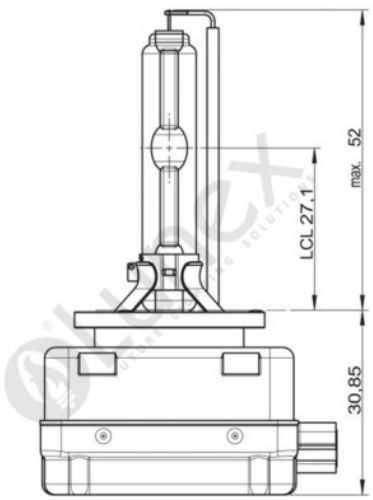

Technical data

Power input	35 W
Power input tolerance	±3 %
Nominal voltage	85 V
Nominal wattage	35 W
Test voltage	13.5 V
Luminous flux	2800 lm
Luminous flux tolerance	±15 %
Color temperature	8000 K
Product weight	60 g
Base	PK32d-3
Lifespan B3	1450 h
Lifespan Tc	1950 h

Copyright 2017 Lunex. All Rights Reserved.

contact: office@lunextechnology.co.uk